इंटरनेट मानक

Disclosure to Promote the Right To Information

Whereas the Parliament of India has set out to provide a practical regime of right to information for citizens to secure access to information under the control of public authorities, in order to promote transparency and accountability in the working of every public authority, and whereas the attached publication of the Bureau of Indian Standards is of particular interest to the public, particularly disadvantaged communities and those engaged in the pursuit of education and knowledge, the attached public safety standard is made available to promote the timely dissemination of this information in an accurate manner to the public.

"जानने का अधिकार, जीने का अधिकार"
Mazdoor Kisan Shakti Sangathan
"The Right to Information, The Right to Live"

"पुराने को छोड नये के तरफ"
Jawaharlal Nehru
"Step Out From the Old to the New"

IS 12486 (1988): Meat Inspection Table [FAD 18: Slaughter House and Meat Industry]

"ज्ञान से एक नये भारत का निर्माण"
Satyanarayan Gangaram Pitroda
"Invent a New India Using Knowledge"

Act Number 22 of 2005
The Indian Parliament
RIGHT TO INFORMATION

Made Available By
Public.Resource.Org

"ज्ञान एक ऐसा खजाना है जो कभी चुराया नहीं जा सकता है"
Bhartṛhari—Nītiśatakam
"Knowledge is such a treasure which cannot be stolen"

BLANK PAGE

BRUTUM FULMEN

IGNORANTIA JURIS NON EXCUSAT

PROTECTED BY COPYRIGHT

Indian Standard (Reaffirmed 2000)

SPECIFICATION FOR MEAT INSPECTION TABLE

1. Scope — Specifies material, dimensions, constructional and other requirements of meat inspection table.

2. Material — Frame shall be made of mild steel angles conforming to IS : 808 (Part 5)-1976 'Dimensions for hot-rolled steel sections: Part 5 equal leg angles (*second revision*)', and/or medium grade galvanized iron pipe conforming to IS : 1239 (Part 1)-1979 'Mild steel tubes, tubular and other wrought steel fittings: Part 1 Mild steel tubes (*fourth revision*)'. The table top shall be made of 2 mm thick stainless steel sheet conforming to grade X04 Cr 19 Ni 9 of IS : 1570 (Part 5)-1985 'Schedule for wrought steels: Part 5 Stainless and heat resisting steels (*second revision*)'.

3. Dimensions — As shown in Fig. 1.

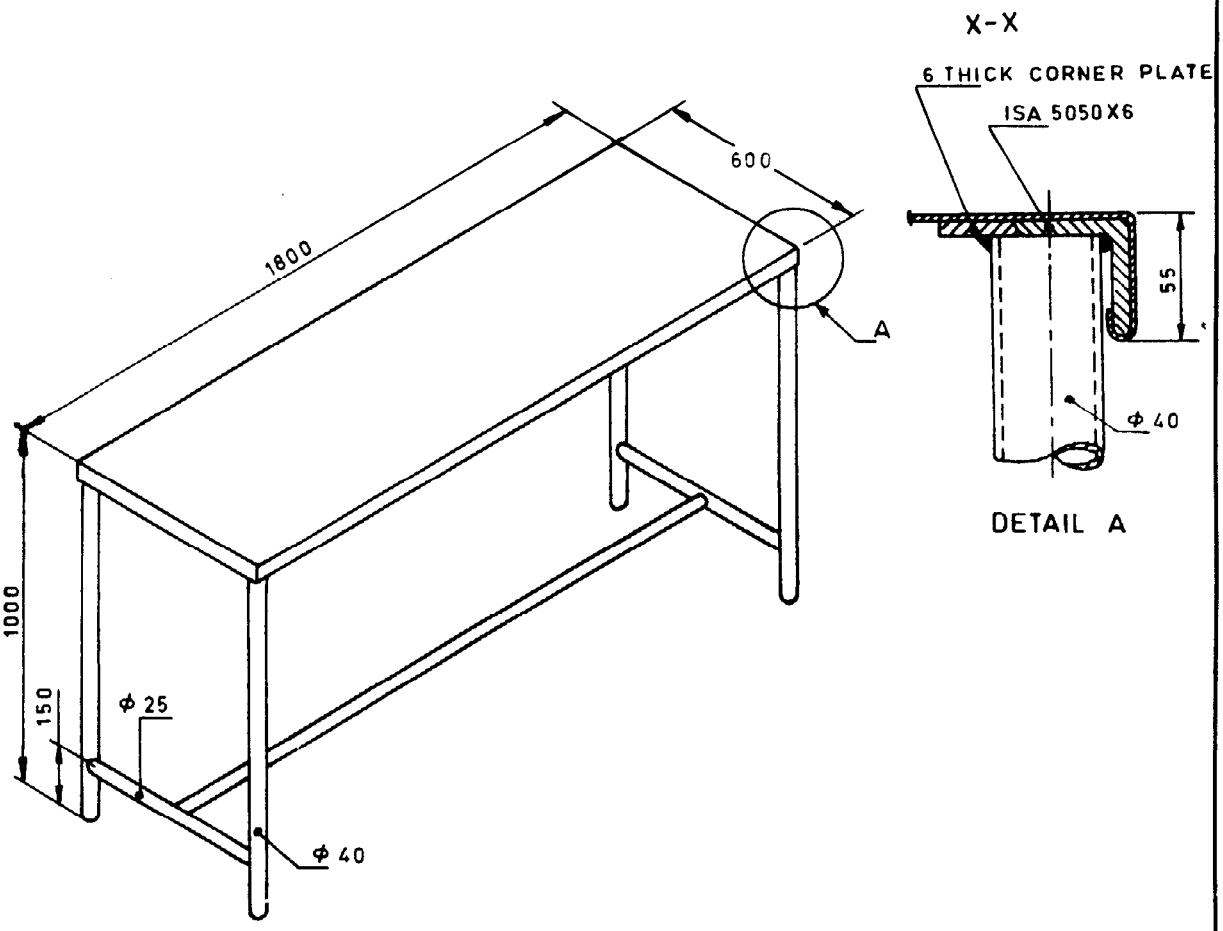

All dimensions in millimetres.

FIG. 1 MEAT INSPECTION TABLE

3.1 The tolerances for various dimensions shall be according to IS : 2102 (Part 1)-1980 'General tolerances for dimension and form and position: Part 1 General tolerances for linear and angular dimensions (*second revision*)'.

Slaughter House and Equipment Sectional Committee, AFDC 54 [Ref : Doc : AFDC 54 (2958)]

Adopted 23 September 1988 © May 1989, BIS

BUREAU OF INDIAN STANDARDS
MANAK BHAVAN, 9 BAHADUR SHAH ZAFAR MARG
NEW DELHI 110002

4. Constructional Requirements

4.1 The edges of the table shall be as shown in Fig. 1.

5. Workmanship and Finish

5.1 The table top shall be smooth, clean, duly polished and free from all defects.

5.2 The frame shall be enamelled in white.

6. Marking

6.1 Each table shall be marked with the following information:

a) Manufacturer's name or trade-mark, if any;
b) Year of manufacture; and
c) Batch or code number.

6.2 *Certification Marking* — Details available with the Bureau of Indian Standards.

7. Sampling — As agreed to between the manufacturer and the purchaser.

EXPLANATORY NOTE

Meat inspection tables are used in slaughter houses for the inspection and further processing of carcasses.

Printed at Printograph, New Delhi, India